SANY

Quality Changes the World

CHAMPION IN ITS CLASS

RELIABLE.
COST-EFFECTIVE.
PRODUCTIVE.

CONSTRUCTION MACHINERY

COMPACT EXCAVATORS
SY135C

Engine
ISUZU 4JJ1X
Rated power
78.5 kW / 2000 rpm
Bucket capacity
0.6 m³
Operating mass
14870 kg

SANY

For challenging tasks, you need a first-class partner

Quality comes from experience. And from new ideas. This is why we combine these two crucial factors at SANY. This is because we are one of the world's leading producers, having sold more than **170 000** excavators in **10 years**. This means that you can always rely on sophisticated products that have been tried and tested in practice. An impressive **5–7 %** of our annual turnover is dedicated to research and development. This is why we give you not only our word, but also our extraordinary **five-year warranty** as a guarantee of how powerful and robust our products are.

170 000
EXCAVATORS SOLD IN
10 YEARS

5–7 %
TURNOVER FOR RESEARCH
AND DEVELOPMENT

FIVE-YEAR
WARRANTY *

Quality Changes the World

* Applicable in certain markets, please check with your local dealer.

SY135C
HARD FACTS

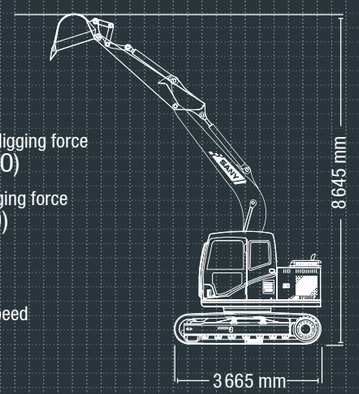

Max. bucket digging force
103 kN (ISO)

Max. arm digging force
67 kN (ISO)

Swingspeed
12 rpm

Max. travel speed
5.3 km/h

COMPACT EXCAVATOR REDEFINED

Despite its compact design, the SANY SY135C displays impressive versatility and performance. The universal machine is outstanding at digging, crushing, loading and backfilling. Perfect for use in places where space is limited: In road and canal construction, inner city areas, horticulture and landscaping and demolition work. Its power allows it to reach high excavating forces which would otherwise only be possible with significantly bigger machines. All that with an astonishingly large operating radius. This saves time, since the machine therefore needs to be moved far less often on the construction site. Talking of movement, the compact dimensions of the machine facilitate easy and safe transport.

ECONOMY

STRONG PERFORMANCE WITH LOW FUEL CONSUMPTION

More work with less fuel – the SY135C's sophisticated engine and hydraulic concept makes this a reality. The hugely powerful diesel engine, equipped with common rail technology and AdBlue emission control, puts on a strong show with its maximum torque of 375 Nm and 1 800 rpm. A choice of various operating modes and automatic speed reduction optimise fuel consumption in a tangible way. This is where power meets efficiency. The total savings thanks to improved fuel efficiency result in significant economic benefits.

ECONOMY

The right kind of pressure

Both powerful variable displacement axial piston pumps are operated in such a way that they only build up as much pressure as is actually required. This saves fuel and prolongs the life of the components.

In addition, its hydraulic system has a sophisticated structure, which reduces friction loss and pressure drops in the pipelines and ensures that power is transferred efficiently for all working condition's.

QUALITY

Quality is worth it – High-quality components improve the machine's durability, while additionally increasing the intervals between each maintenance and service.

DIMENSIONS

Compact power – The SANY SY135C tackles work extremely efficiently as a compact excavator. High performance and impressive stability – the perfect combination to complete all tasks quickly and reliably on the construction site.

USER EXPERIENCE

Easy to maintain – The engine bonnet that can be fully opened and the clear arrangement of the key components in the centre make maintenance and service quick and easy.

SAFETY

Comprehensive protection – The hydraulic cylinders are optimally protected against damage thanks to their careful arrangement and stable protective plates.

COMPONENTS

Reliable drive – The tried-and-tested ISUZU-4JJ1X engine guarantees reliable performance in the long term, even in harsh working conditions.

ECONOMY

Efficiency and power – The smart control system adapts the pump capacity to the available engine power for greater cost-effectiveness and reduced fuel consumption.

QUALITY

With the benefit of robustness

Durability and robustness are standard features on all SANY excavators. The reinforced structure of the SY135C lends the chassis exemplary stability, thereby prolonging the machine's service life. What's more, all of the panels are made solely of metal, which makes them particularly resilient.

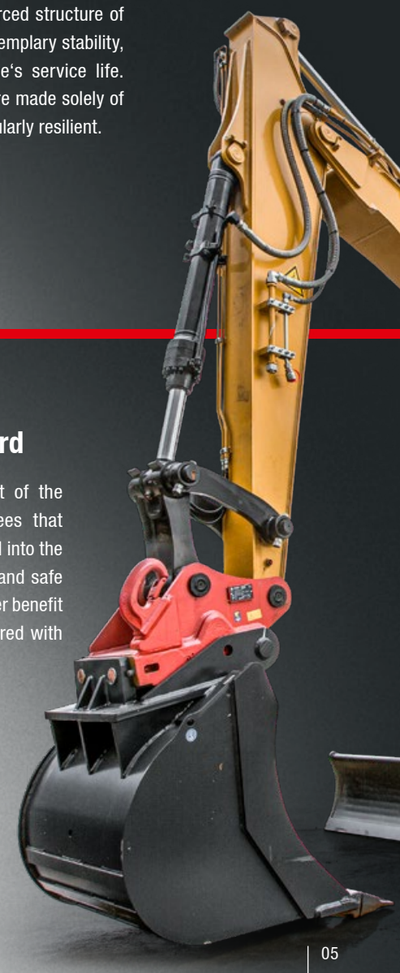

Absolute reliability – for peace of mind!

SANY's five-year warranty* gives you the assurance that you can fully count on your equipment.

* With participating partners

COMPONENTS

Flexibility as standard

The full hydraulic arrangement of the quick-change system guarantees that functions are perfectly integrated into the control menu, facilitating quick and safe attachment replacement. A further benefit is time and cost savings compared with regular retrofitting.

USER EXPERIENCE

Control with feeling

The joystick control enables all functions of the excavator to be operated intuitively. The hydraulics valve control responds to commands immediately. Together with the automatic speed setting, this enables work to be carried out precisely and safely with higher efficiency and lower fuel consumption for the same operation. Not forgetting the large multifunctional monitor, which is easy to read and navigate, and displays all important information.

USER EXPERIENCE

THE PREMIUM CLASS OF DRIVER COMFORT

A key feature of the SY135C is comprehensive comfort for its drivers. Excellent insulation around the cab provides reliable protection from noise and vibrations, as well as from high and low temperatures. The air-suspension driver's seat, provided as standard, offers the best possible comfort and protection from fatigue with its high seat backrest and various adjustment options. Plenty of space and room for movement, a radio and a 12 V jack, adjustable ventilation, heating and an automatic climate control system, a huge amount of stowage space, various options for storage and much more complete the comfort package.

Our highlights – the added benefits SANY offers you:

- ✚ A comfortable driver's cab with numerous extras
- ✚ Robust, wide heavy-duty undercarriage
- ✚ Hydraulic arrangement of the quick-change system
- ✚ Clear instruments and a large, high-resolution colour display plus camera
- ✚ High-quality machining thanks to robot-manufactured welded seams
- ✚ Extensive safety equipment
- ✚ LED work lighting

SANY PLUS ADVANTAGES

SAFETY

Minimising risks

Ergonomic handrails enable safe access to the maintenance platform. Large mirrors facilitate safe movement during operation, while the integrated safety valves keeps the boom and arm in position, even in the worst-case scenario.

DIMENSIONS

EVERYTHING WITHIN REACH

The SY135C impresses on-site thanks to its stability and stableness, meaning it brings its power quickly and safety to where it is needed. Its large working radius is also a plus point, with a maximum horizontal reach of 8290 mm and maximum excavation depth of 5500 mm. The heavy dozer blade ensures additional stability.

ENGINE

Model	ISUZU 4JJ1X
Typ	Water-cooled, 4 cylinder, with commonrail and Adblue
Exhaust emissions	Stage IV
Rated power	78.5 kW / 2000 rpm
Max. torque	375 Nm / 1600 rpm
Displacement	2999 ccm
Batteries	2 x 12V / 120 Ah

SERVICE REFILL CAPACITIES

Fuel tank	245 l
Engine coolant	6 l
Engine oil	15 l
Drive (per side)	2.2 l
Adblue	20 l
Hydraulic oil tank	175 l

PERFORMANCE

Swingspeed	12 rpm
Max. travel speed	High 5.3 km/h, slow 3.5 km/h
Max. travel force	112 kN
Gradeability	35°
Bucket capacity	0.6 m³
Groundpressure	0.41 kg/cm²
Bucket digging force ISO	103 kN
Arm digging force ISO	67 kN

OPERATING MASS

SY135C	14870 kg

RELIEF VALVE SETTINGS

Implement circuit	343 bar
Swing circuit	250 bar
Travle circuit	343 bar
Pilot pressure	39 bar

HYDRAULIC SYSTEM

Mainpump	2 x variable-piston-pump with electronic positive control
Max. oilflow	2 x 126 l/min
Travelmotor	2 speed axial piston motor with planetary reducer and automatic multi-disc brake
Swingmotor	Axial piston motor with planetary reducer and automatic holding brake

UNDER AND UPPER STRUCTURE

Boom length	4600 mm
Arm length	2500 mm
Bottomrollers	1
Toprollers	7
Rotation device	Planetary gear reducer driven by an axial piston motor, automatic hydraulic released slewing brake

LIFTING CAPACITIES OF LOWER AND UPPER DOZER BLADE*

Load point heigh	Radius 2.0 m / 6.6 ft		3.0 m / 9.8 ft		4.0 m / 13.1 ft		5.0 m / 16.4 ft		6.0 m / 19.7 ft only below		6.0 m / 19.7 ft only above		7.0 m / 23.0 ft		Digging reach Maximal	
7.0 m kg					3200	3200									2550	2550
23.0 ft lb					7055	7055									5620	5620
6.0 m kg							3150	3150							2250	2250
19.7 ft lb							6945	6945							4960	4960
5.0 m kg							3500	3500	2400	2400	2400	2400			2100	2100
16.4 ft lb							7715	7715	5290	5290	5290	5290			4630	4630
4.0 m kg					3950	3950	3700	3500	3550	2650	3550	2650			2050	2050
13.1 ft lb					8710	8710	8150	7715	7825	5840	7825	5840			4520	4520
3.0 m kg			5800	5800	4650	4650	4050	3400	3700	2600	3700	2600			2050	2050
9.8 ft lb			12785	12785	10250	10250	8930	7495	8160	5730	8160	5730			4520	4520
2.0 m kg			7500	6800	5450	4500	4500	3300	3950	2550	3900	2550	2300	2050	2100	2100
6.6 ft lb			16535	14990	12015	9920	9920	7275	8710	5620	8600	5620	5070	4520	4630	4630
1.0 m kg			6800	6450	6150	4300	4900	3200	4150	2500	3800	2500	2450	2000	2200	2200
3.3 ft lb			14990	14220	13560	9480	10800	7055	9150	5510	8380	5510	5400	4410	4850	4850
Ground kg			6750	6300	6500	4200	4900	3100	4300	2450	3750	2450			2350	2350
line lb			14880	13890	14330	9260	10800	6835	9480	5400	8270	5400			5180	5180
-1.0 m kg	4550	4550	8450	6250	6550	4100	5200	3050	4250	2400	3750	2400			2600	2600
-3.3 ft lb	10030	10030	18630	13780	14440	9040	11465	6725	9370	5290	8270	5290			5730	5730
-2.0 m kg	6900	6900	8150	6300	6300	4100	5000	3050	3950	2400	3750	2400			3050	3050
-6.6 ft lb	15210	15210	17965	13890	13890	9040	11025	6725	8710	5290	8270	5290			6725	6725
-3.0 m kg	9600	9600	7200	6350	5600	4150	4350	3100							3750	3750
-9.8 ft lb	21165	21165	15870	14000	12345	9050	9590	6835							8270	8270
-4.0 m kg			5500	5500	4150	4150									3550	3550
-13.1 ft lb			12125	12125	9150	9150									7825	7825

*at 600 mm track pads width

DIMENSIONS (TRANSPORT)

A	Transport length	7700 mm
A‘	Transport length (blade)	8850 mm
B	Transport width*	2590 mm
C	Upperstructure carriage	2490 mm
D	Height over cabin/ROPS	2820 mm
E	Height of Boom – transport	2815 mm
F	Overall length of crawler	3665 mm
G	Tail length	1500 mm
H	Track gauge	1990 mm
I	Undercarriage width (blade)*	2550 mm
	Undercarriage width (blade)**	2490 mm
J	Horizontal distance to blade	2650 mm
K	Blade height	480 mm
L	Track height	815 mm
M	Track pads width	500 mm
		600 mm
		700 mm
N	Min. ground clearance	425 mm
O	Counterweigth clearance	910 mm
P	Engine cover height	2130 mm
Q	Tail swing radius	2205 mm
R	Center distance of tumblers	2930 mm

*at 600 mm track pads width
**at 500 mm track pads width

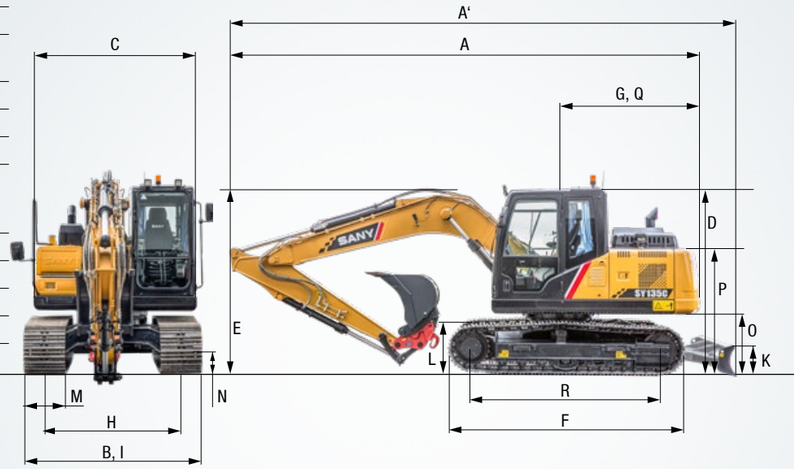

WORKING AREA

A	Max. digging reach	8290 mm
B	Max. digging depth	5500 mm
C	Max. digging height	8645 mm
D	Max. dumping height	6175 mm
E	Max. vertical digging depth	4850 mm
F	Overall height over arm by min. swing radius	6500 mm
G	Min. swing radius	2500 mm
H	Max. clearance when blade up	490 mm
I	Max. depth of blade down	320 mm

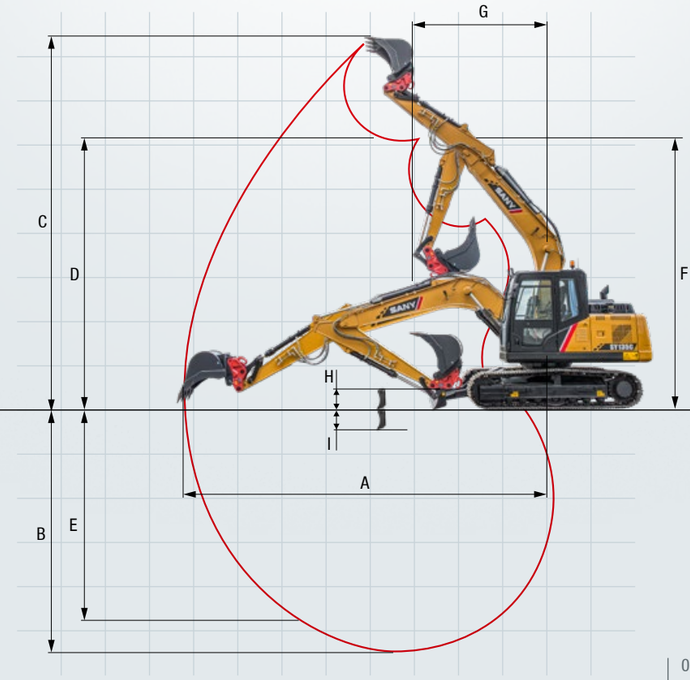

The SY135C – outstandingly well-equipped as standard

Already fitted ex-works with an excellent range of equipment. The SANY SY135C is superbly equipped as standard with optional additional equipment to broaden its scope of possible applications.

OPERATORS COMFORT / CABINE

Airsuspensio seat	●
Heated seat	●
Heater	●
Automatic air conditioning C/H	●
Radio and speaker	●
Armrests (adjustable)	●
12v outlets	●
Wiper	●
Sprayer f. wiper	●
Sky light openable	●
Integrated cooling box	●
AUX 1 on Joystick	●
AUX 2 on Joystick	●
Removable front-window	●
Rubberfloor	●

WORKING LIGHTS

Lights – front (LED)	●
Lights – boom (LED)	●
Lights – platform (LED)	●

UNDERCARRIAGE

Steel tracks	●
Safety valves on blade cylinder	○
Holes/loops for fixing	●

WORKING EQUIPMENT

Boom and arm load holding valves with overload indicator	●
Double acting circuit for hydraulic quick coupler with piping	●
Breaker&Shear line proportional on Joystick with piping	●
Rotation line proportional on Joystick with piping	●
Flow adjustment for attachments	●
Dozer blade	●
Without dozer blade	○

SAFETY

Battery master switch	●
Warning beacon	●
Lockable hoods	●
Handrails	●
Lockablge fuel cap	●

ENGINE

Auto idle	●
Diesel filter	●
Airfilter	●

HYDRAULIC SYSTEM

Swing brake	●
2 speed travel	●
Hydr. Pre-pressure operating joysticks	●
Piping for additional hydraulic function AUX 1	●
Piping for additional hydraulic function AUX 2	●
Mainfilter	●

Standard equipment ● Special option ○

The standard and special options differ depending on the country in which the compact excavator is delivered. If you have any questions, please contact your dealer directly.

Parts supply – quick and reliable

With the purchase of a SANY compact excavator you have made an investment in the future. Fast availability of spare parts is your guarantee of minimal downtimes and failure times.

A SERVICE YOU CAN RELY ON

Just as we do with our excavators, we also demand high quality and reliability of our service products. This underlines our equipment's performance in terms of their durability and their excellent price-performance ratio. After all, maintenance is crucial for efficiency, cost-effectiveness and safety. Your SANY dealer is happy to help you with a comprehensive range of services to ensure that your machine continues operating efficiently in the long term.

SANY – flexible, fast and always there for you

Rapid assistance, tailored advice and a reliable supply of original parts – that is what we mean by a premium service.

SANY PLUS ADVANTAGES

The added benefits SANY offers you:

- ✚ Fast supply thanks to the central warehouse near Cologne
- ✚ More than 15,000 spare parts to make your machine highly reliable
- ✚ Expert knowledge for optimal supply for your machine
- ✚ Thanks to SANY's special training programme, our dealers are always kept up-to-date so that they can face all technical challenges.

Detailed information in black and white

Handbooks and documents are available for all SANY compact excavators, and these can help you with operation, maintenance, servicing and repairs. These include operating and maintenance instructions and technical specifications.

HIGHLIGHTS **SY135C**

PERFORMANCE YOU CAN RELY ON

The SY135C resoundingly proves that the performance of a compact excavator is not necessarily determined by bulky size. Weighing a total of almost 15 tonnes, it offers the optimum ratio of power to manoeuvrability. In addition, the robust, wide heavy-duty undercarriage and the robust dozer blade provide a high level of stability. This allows it to optimally apply its power – for a comprehensive range of applications anywhere where larger machines have to fit.

QUALITY IS WORTH IT

High-quality materials and careful machining are the basis for a **long service life**. This is part of a sophisticated concept: For example, the boom on the **topside and underside is manufactured from one single sheet** and welded continuously from front to back.

COMPACT POWER

The machine offers **excellent excavating forces at maximum stability** for its class.

EASY TO MAINTAIN

All routine checks and work on the machine can be carried out quickly and easily. For example, the machine's various bearings can be lubricated with **grease nipples from just one point**.

COMPREHENSIVE PROTECTION

Safety for users, machines and the working environment is of the utmost importance at SANY. The SY135C's **safety equipment** includes, amongst other features, **a driving alarm and rotating beacon, an overload warning** for lifting, **safety valves** and of course the corresponding **protective plates over the blade cylinders**.

RELIABLE DRIVE

The powerful **ISUZU-4JJ1X engine** with AdBlue emission control ensures the correct forces are applied for all tasks.

EFFICIENCY AND POWER

In conjunction with the electronic fuel injection, the **autothrottle function** adjusts the engine speed to the power required. This means that the smart hydraulic system **reduces the fuel consumption**, engine wear and exhaust emissions.

TECHNICAL HIGHLIGHTS

Engine	ISUZU 4JJ1X
Rated power	78.5 kW / 2 000 rpm
Max. torque	375 Nm / 1 600 rpm
Max. travel speed	5.3 km/h
Swingspeed	12 rpm
Mainpump	2 x variable-piston-pump with electronic positive control
Max. oilflow	2 x 162 l/min

„SANY, BECAUSE YOU CAN HAVE GREAT PRICES AND GREAT PERFORMANCE!“

Eike Brodtmann (owner) –
rb-bau & Partner, Gnarrenburg, Germany

Not all products are available in all markets. As part of our continuous improvement process, we reserve the right to modify specifications and designs without giving prior notice. The figures may contain additional options.

SANY

Quality Changes the World

SANY EUROPE GmbH
Sany Allee 1
D-50181 Bedburg
fon +49 2272 90531 100
fax +49 2272 90531 109
info@sanyeurope.com
www.sanyeurope.com

HEX - SY135 - 0202 - 10 - EN - V1